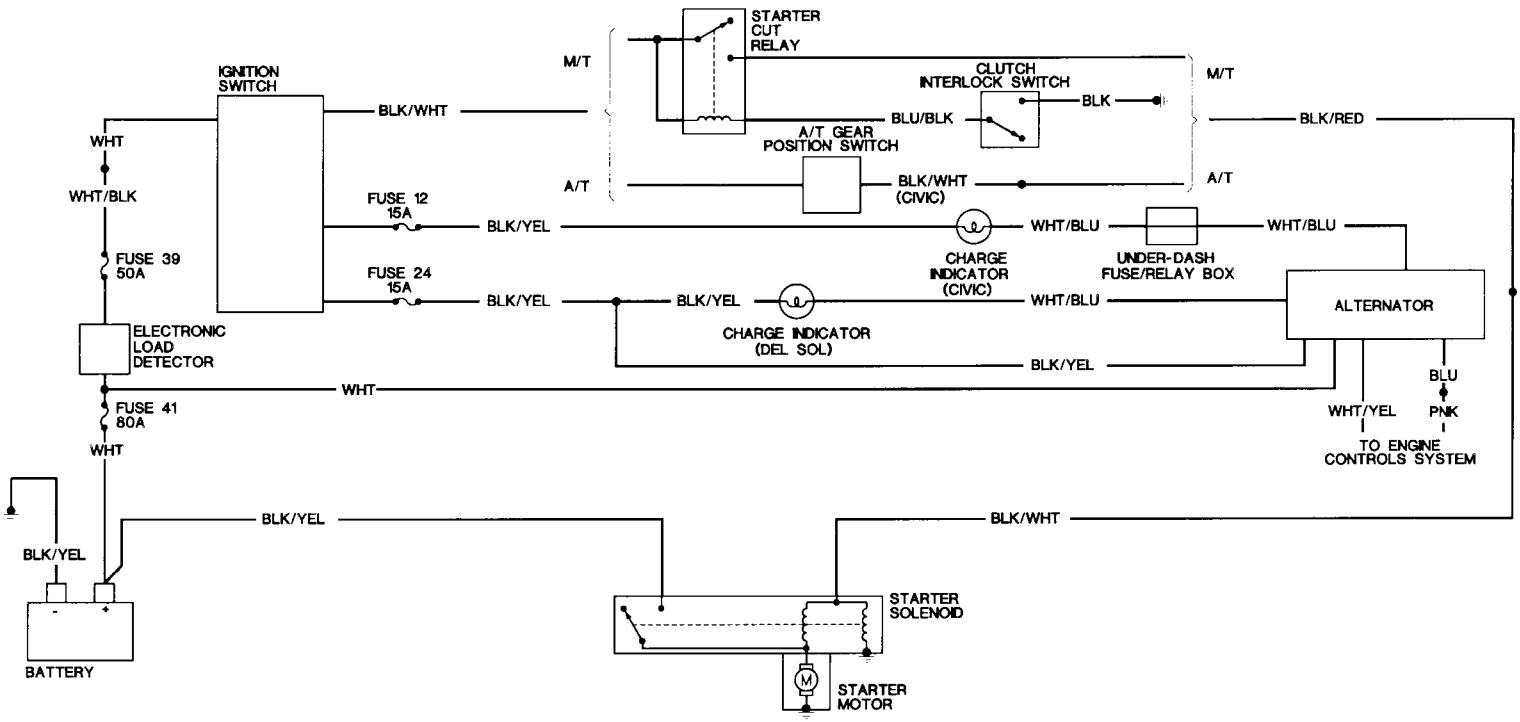
STARTER CUT RELAY
M/T
IGNITION SWITCH
BLK/WHT
CLUTCH INTERLOCK SWITCH
BLK
BLU/BLK
M/T
BLK/RED
WHT
A/T GEAR POSITION SWITCH
WHT/BLK
A/T
BLK/WHT (CIVIC)
A/T
FUSE 12 15A
BLK/YEL
WHT/BLU
WHT/BLU
FUSE 39 50A
CHARGE INDICATOR (CIVIC)
UNDER-DASH FUSE/RELAY BOX
FUSE 24 15A
BLK/YEL
BLK/YEL
WHT/BLU
ALTERNATOR
ELECTRONIC LOAD DETECTOR
CHARGE INDICATOR (DEL SOL)
BLK/YEL
WHT
BLU
FUSE 41 80A
WHT/YEL
PNK
TO ENGINE CONTROLS SYSTEM
WHT
BLK/YEL
BLK/YEL
BLK/WHT
BLK/YEL
STARTER SOLENOID
BATTERY
STARTER MOTOR

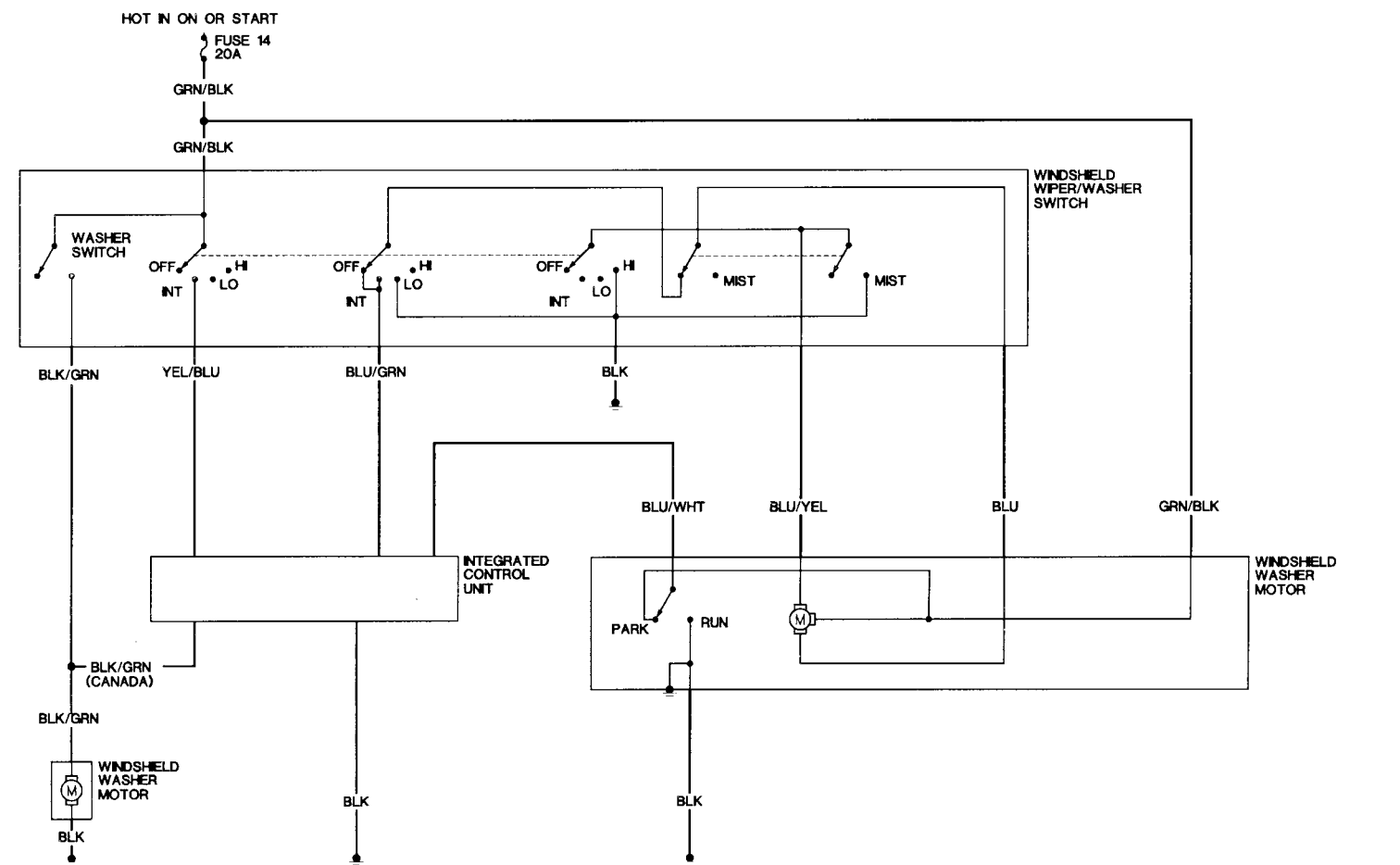
HOT IN ON OR START
FUSE 14 20A
GRN/BLK
GRN/BLK
WINDSHIELD WIPER/WASHER SWITCH
WASHER SWITCH
OFF
HI
INT
LO
OFF
HI
INT
LO
OFF
HI
INT
LO
MIST
MIST
BLK/GRN
YEL/BLU
BLU/GRN
BLK
BLU/WHT
BLU/YEL
BLU
GRN/BLK
INTEGRATED CONTROL UNIT
WINDSHIELD WASHER MOTOR
PARK
RUN
BLK/GRN (CANADA)
BLK/GRN
WINDSHIELD WASHER MOTOR
BLK
BLK
BLK
BLK